## STM32F103

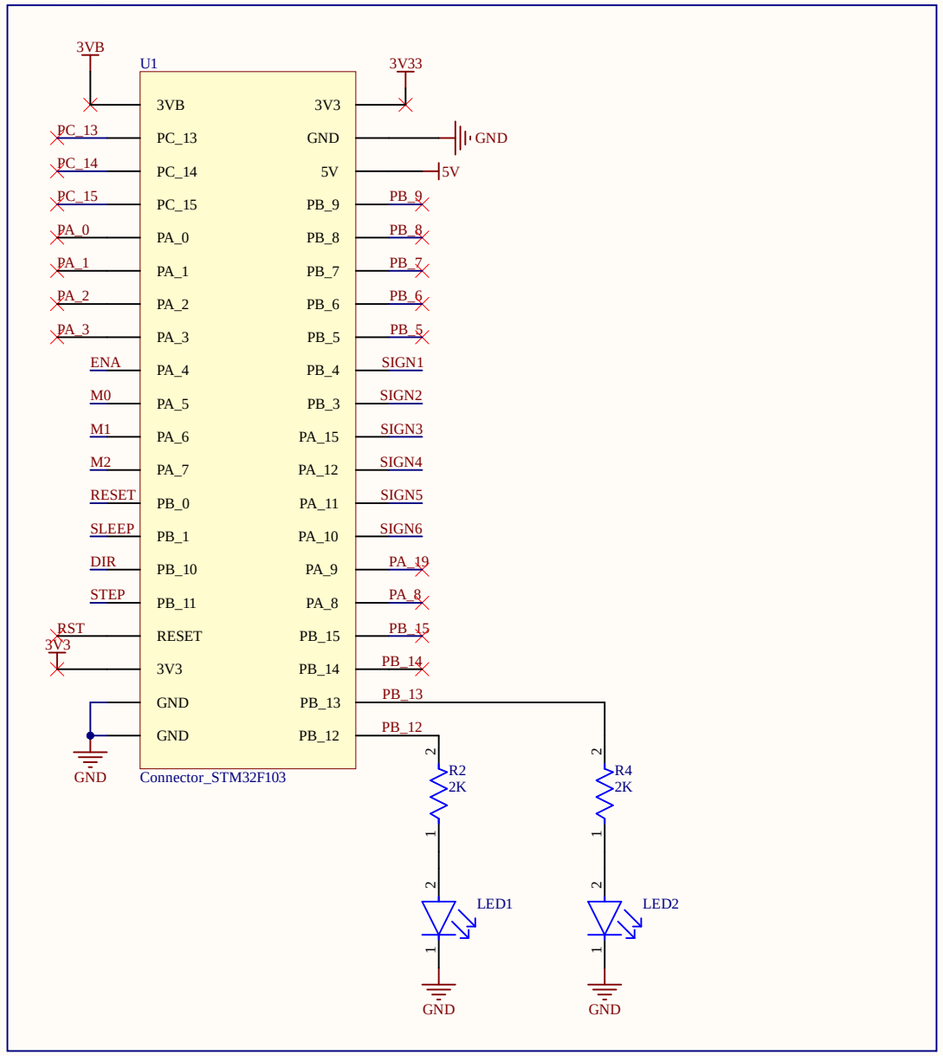


## SERVO MOTEUR

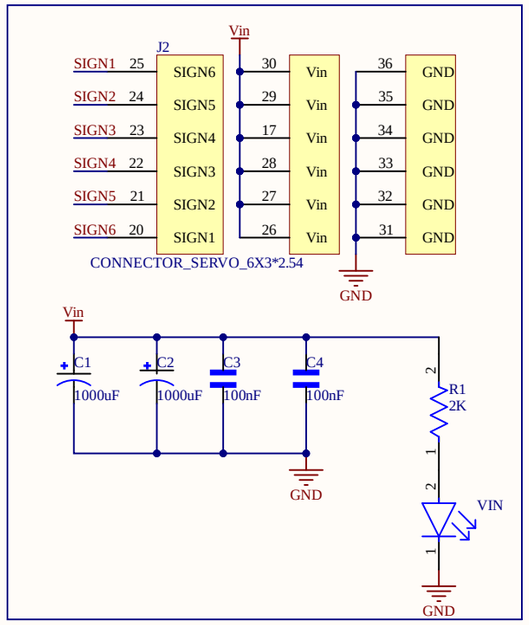


## DRIVER MOTEUR PAS A PAS

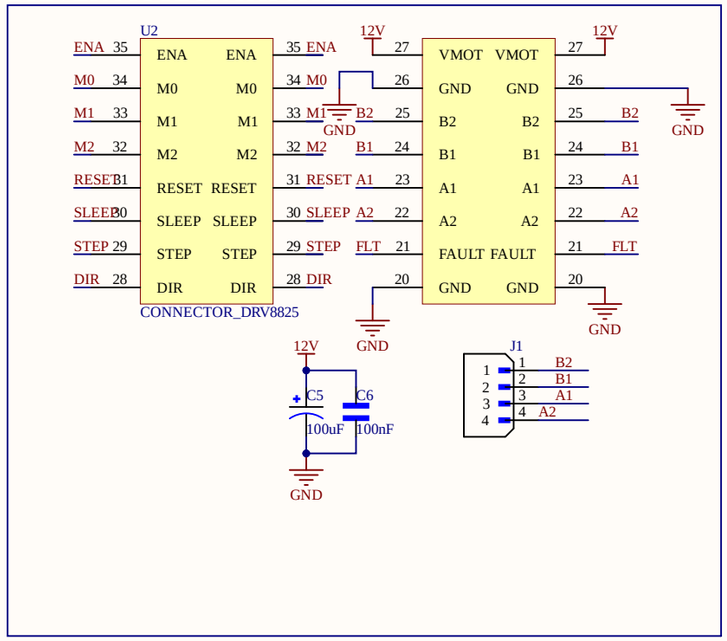


## Alimentation

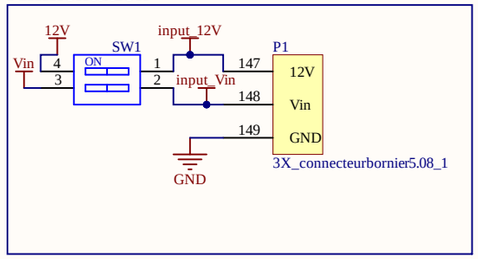


## Bruck Converter

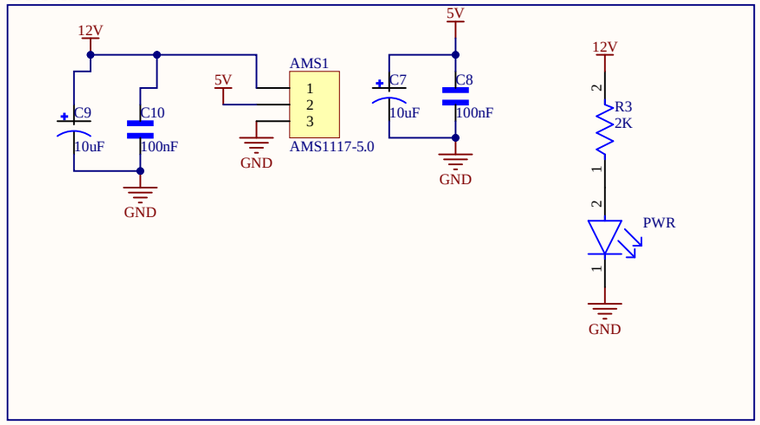


| Title | | |
|---|---|---|
| Size A3 | Number | Revision |
| Date: 5/01/2026 | Sheet of | |
| File: D:\Altuim_Project\..\SCH - ROBOTIC ARM.SchDoc | Drawn By: | |

# ROBOTIC ARM CONTROLLER

V1.0.0 05/2026

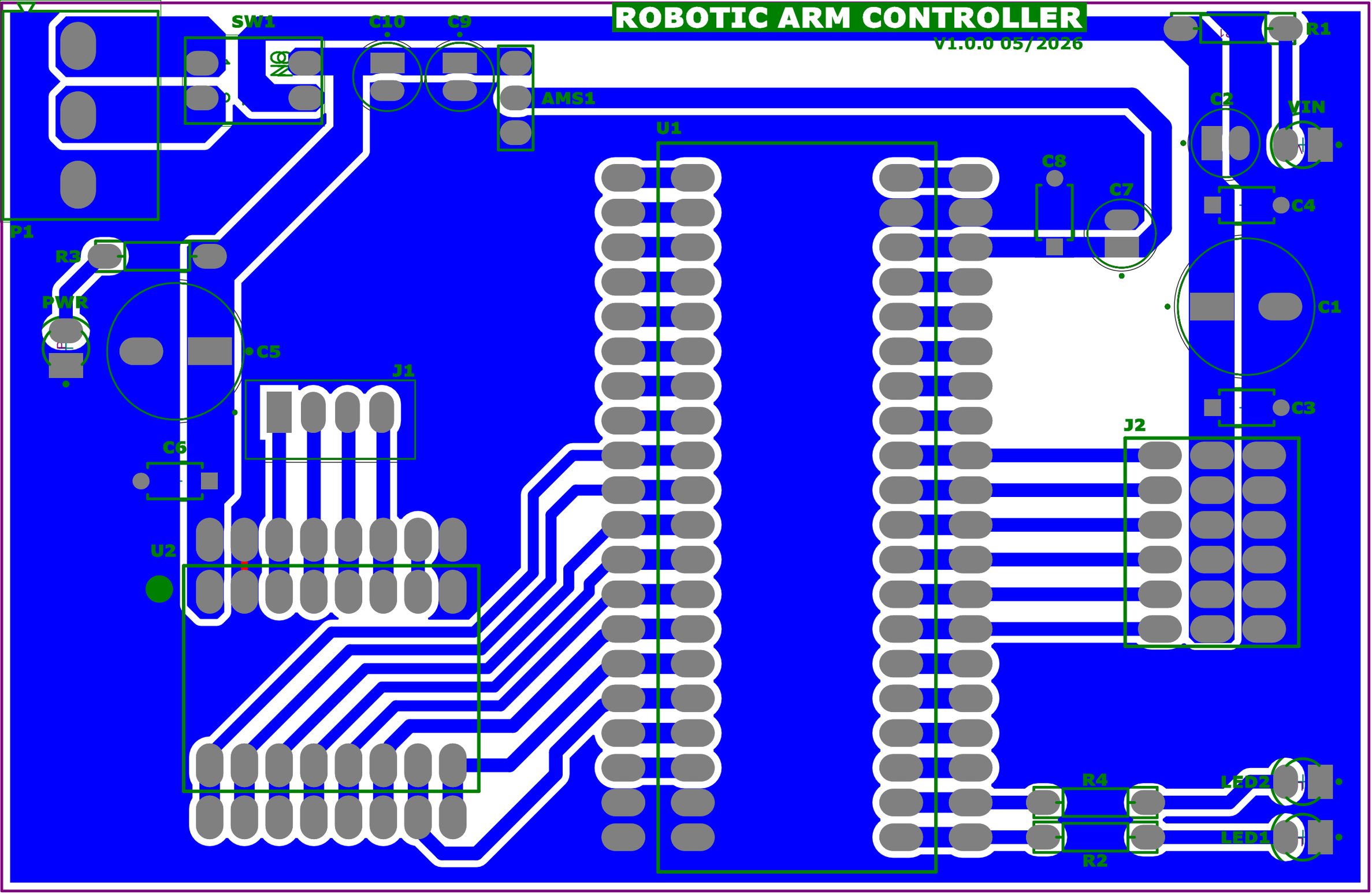

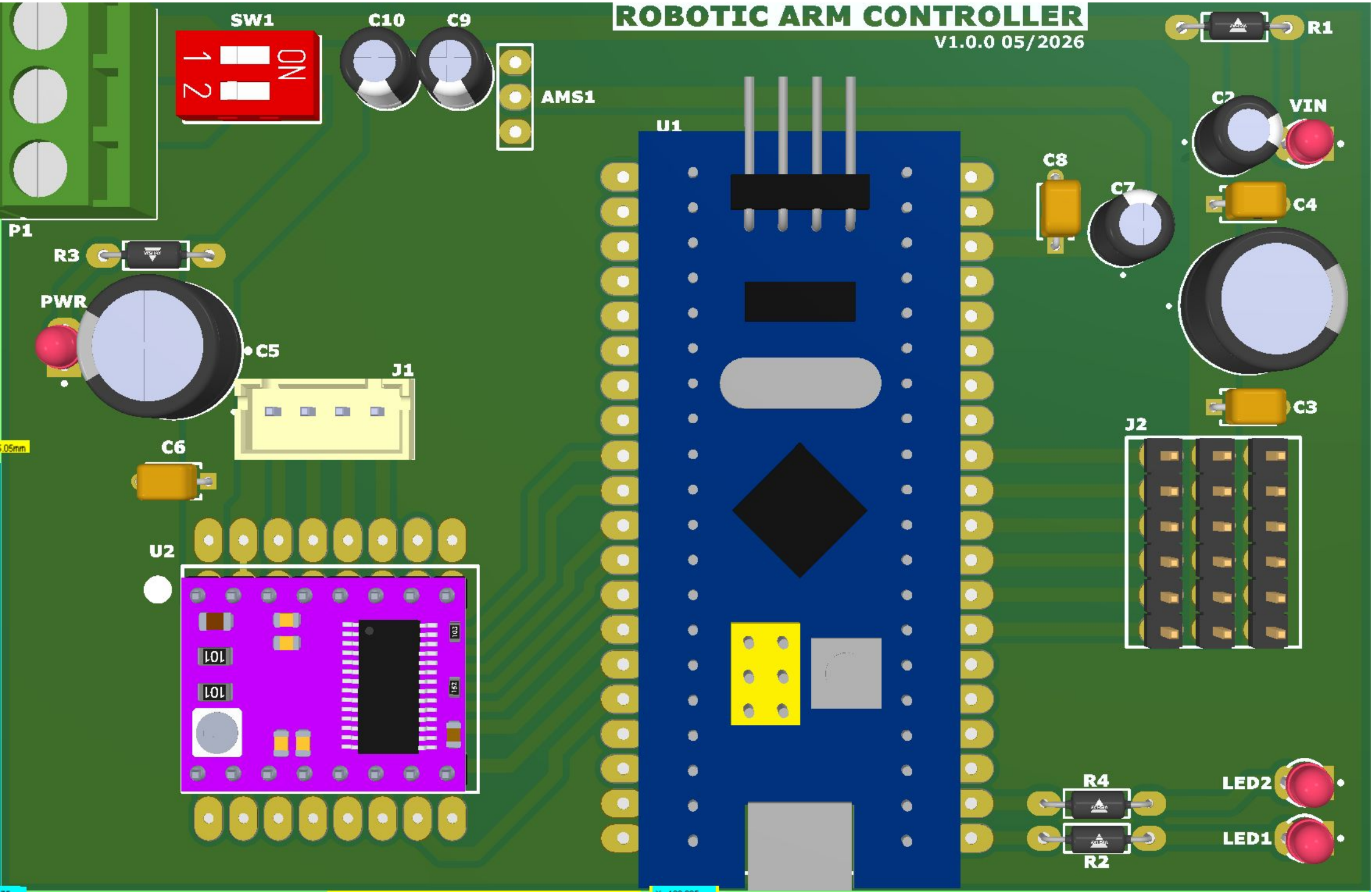
ROBOTIC ARM CONTROLLER
V1.0.0 05/2026
SW1
ON
1 2
C10
C9
AMS1
U1
R1
C2
VIN
C8
C7
C4
P1
R3
PWR
C5
J1
C3
J2
C6
U2
R4
LED2
LED1
R2

| Designator | Comment | Footprint | Quantity |
|---|---|---|---|
| AMS1 | AMS1117-5.0 | HDR1X3 | 1 |
| C1 | 1000uF | *CAPPRD500W60D1000H1600_ECA1CM102(Primary) | 1 |
| C2 | 1000uF | *CAPPRD200W50D550H1250 | 1 |
| C3, C4, C6, C8 | 100nF | *CAPRR508W50L508T317H508 | 4 |
| C5 | 100uF | *CAPPRD500W60D1000H1600_ECA1CM102(Primary) | 1 |
| C7, C9 | 10uF | *CAPPRD200W50D550H1250 | 2 |
| C10 | 100nF | *CAPPRD200W50D550H1250 | 1 |
| J1 | B4B-XH-A(LF)(SN) | *JST_B4B-XH-A(LF)(SN) | 1 |
| J2 | CONNECTOR_SERVO_6X3*2.54 | CONNECTOR_SERVO_6X3*2.54 | 1 |
| LED1, LED2, PWR, VIN | LED1 | FP-VSLB3940-MFG | 4 |
| P1 | 3X_connecteurbornier5.08_1 | 3X_connecteur_bornier_5.08 | 1 |
| R1, R2, R3, R4 | 2K | FP-CMF50-0 | 4 |
| SW1 | 418117170902 | 418117170902 | 1 |
| U1 | Connector_STM32F103 | Connector_STM32F103 | 1 |
| U2 | CONNECTOR_DRV8825 | CONNECTOR_DRV8825 | 1 |